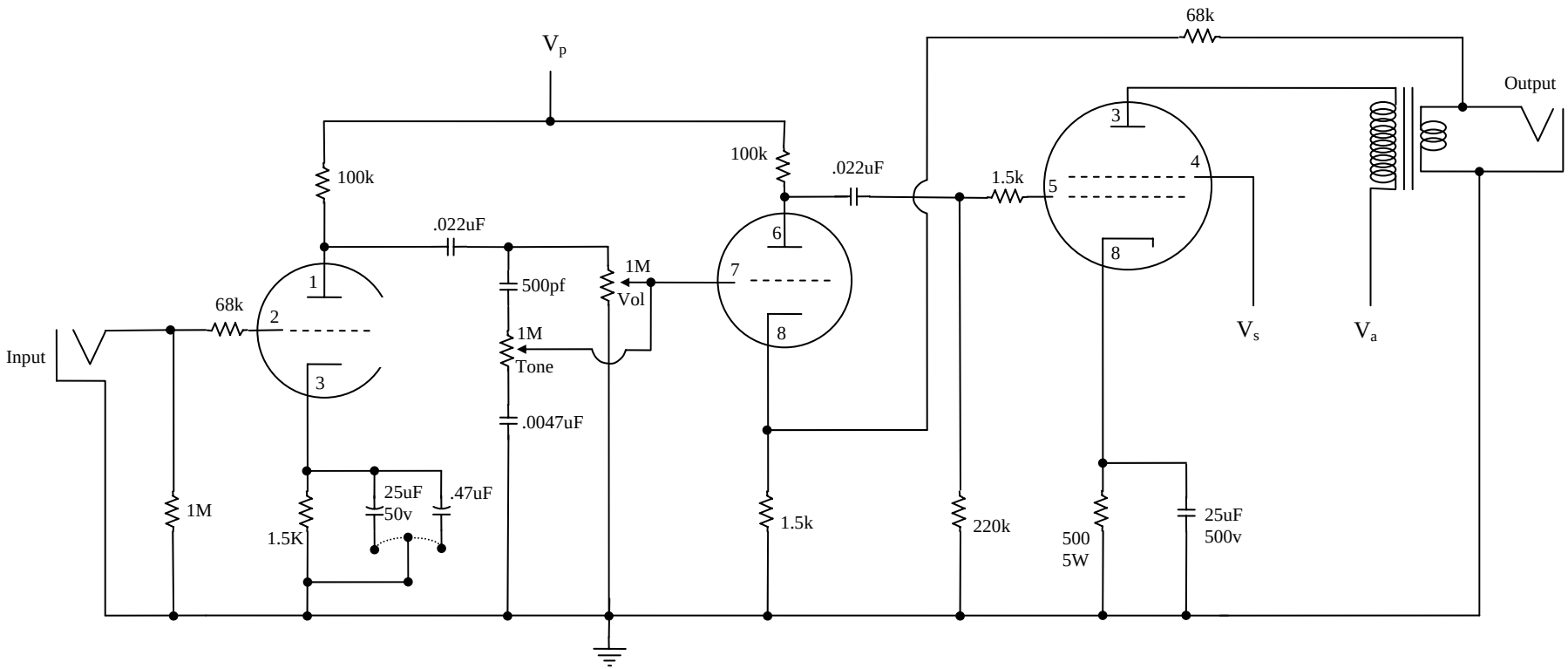
Vp
68k
Output
100k
100k
.022uF
1.5k
.022uF
1
2
3
6
7
8
3
4
5
8
500pf
1M
Vol
68k
1M
Tone
Input
.0047uF
Vs
Va
25uF
50v
.47uF
1M
1.5K
1.5k
220k
500
5W
25uF
500v

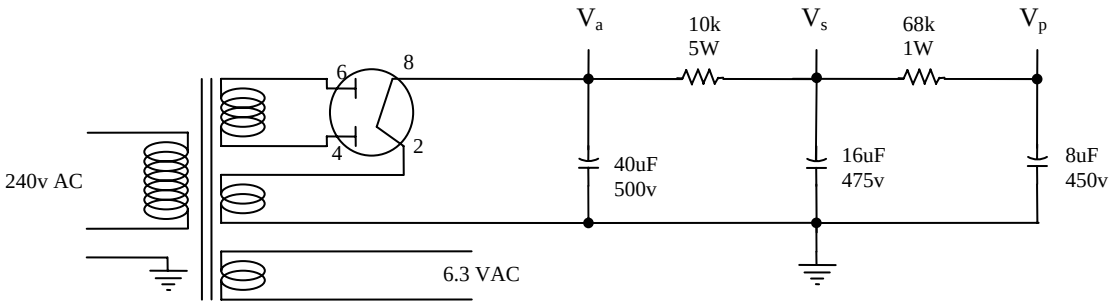
Va
10k
5W
Vs
68k
1W
Vp
6
8
4
2
240v AC
40uF
500v
16uF
475v
8uF
450v
6.3 VAC